METAL-FAB INC.

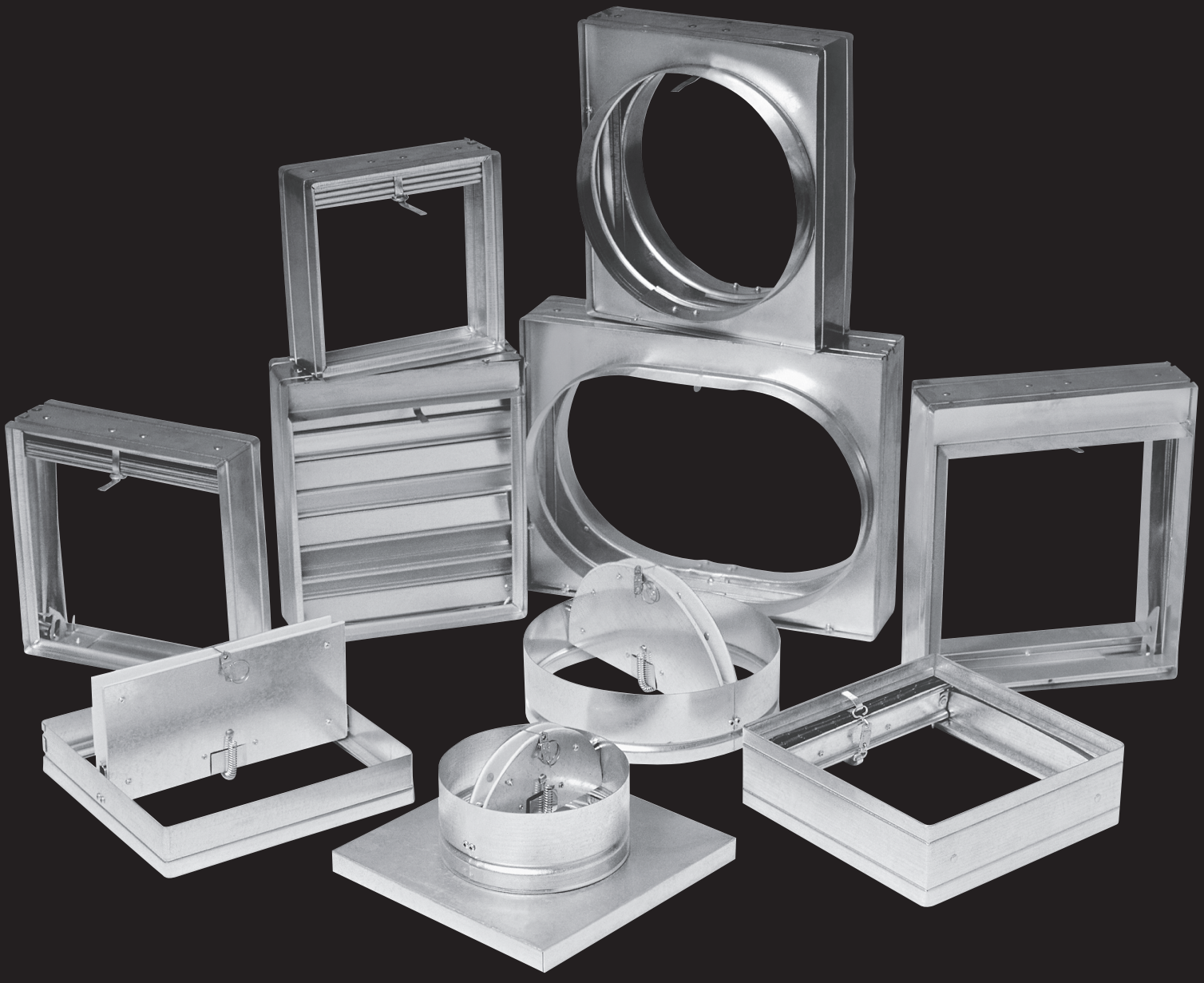

DAMPER PRODUCTS

FIRE DAMPERS • CEILING RADIATION DAMPERS

We make dampers easy for you!

In over 50 years of business, we've learned how to make business easy for our customers, and dampers are no exception. We've honed it down to a science, to save you time and money!

We provide a complete line of models plus configure-to-order (CTO) options to meet your every damper need.

To place an order for Metal-Fab Dampers, here's all you need to tell us:

Fire Dampers

1. Type - A, B or C
2. Fusible Link Temperature Set Point
3. Orientation - Vertical or Horizontal
4. Sleeve Requirement
5. Transition Requirement
6. Pressure Rating
7. Micro-Switch

Type-A

Type-B

Type-C

Type-C w/Sleeve

Ceiling Radiation Dampers

1. Spring or Adjustable Volume Control
2. Fusible Link Temperature Set Point
3. Transition Requirement
4. Thermal Blanket
5. Type-B (Model MCCD only)
6. Thermal Skirt

Round Butterfly

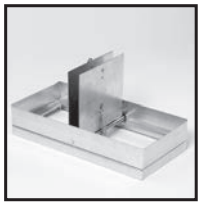
Square/Rectangular Butterfly

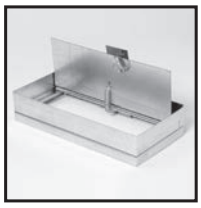
Square/Rectangular Single Blade

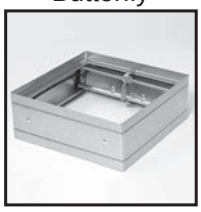
Square/Rectangular Curtain

NEW **Ask about our UL listed ceiling radiation dampers for boot assemblies!**

Make us your damper partner!

You won't find higher quality product or more responsive customer service. Metal-Fab gives you more:

- **No Inventory Requirement**
  Use Metal-Fab as your damper warehouse.
- **Easy Ordering**
  Order online or with our simple order form.
- **Fast, Dependable Shipping**
  We'll ship most orders within 24 hours, even large orders. Custom orders take a little longer, but in any case, you won't be charged extra for fast shipping!
- **Simple Pricing**
  Competitive pricing in a simple price structure that's easy to understand.

New Online Customer Service Portal - Saves time and makes your job easier. Use the simple Damper Calculator, check order status and tracking, find current pricing, order literature and sales support materials.
FAST, SIMPLE, EASY www.metal-fabinc.com

MODEL: MFD

1.5-HOUR RATING

UL CLASSIFIED
(SEE COMPLETE
MARKING ON PRODUCT)

1.5-HOUR RATING:
For use in fire barriers rated for 2 hours or less.

STANDARD CONSTRUCTION:

Frame:	Roll Formed 22 Ga. Galvanized Steel with Safety Edge. Width and height dimensions available in 1/4" increments.
Blades:	Roll Formed 24 Ga. Galvanized Steel, Curtain Type.
Springs:	Stainless Steel.
Transition:	20 Ga. Galvanized Steel.
Finish:	Mill Galvanized Standard.

OPTIONS:
Type-A, Type-B or Type-C
Fusible link 165°F, 212°F, 286°F.
Vertical or Horizontal applications.
Sleeve options are 20 Ga., 18 Ga., or 16 Ga., and 6", 8", 12", 14" or 16" long.
Low pressure, medium/high pressure or high pressure.
Microswitch.

TYPE-A SHOWN

TYPICAL VERTICAL DAMPER

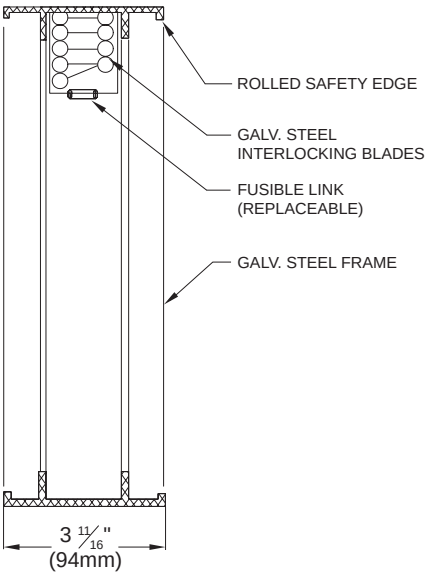

TYPICAL HORIZONTAL DAMPER

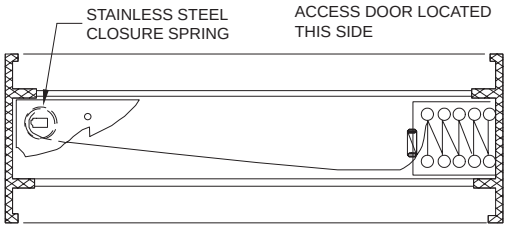

DUCT SIZE LIMITATIONS:

	MIN.	MAX. SINGLE SECTION	MAX. MULTI SECTION
Vertical A	4.25"W x 3.75"H	60.25"W x 60.25"H	120.00"W x 120.00"H
Vertical B	4.25"W x 2.00"H	60.25"W x 55.25"H	120.00"W x 55.00"H
Vertical C	5.25" DIA.	59.25"W x 54.25"H	
Horizontal A	4.25"W x 4.00"H	40.25"W x 40.25"H	120.00"W x 40.00"H
Horizontal B	4.25"W x 2.25"H	40.25"W x 36.25"H	120.00"W x 36.00"H
Horizontal C	5.25" DIA.	39.25"W x 35.25"H	

MODEL: MFDS SLIMFRAME

1.5-HOUR RATING

UL CLASSIFIED
(SEE COMPLETE
MARKING ON PRODUCT)

1.5-HOUR RATING:
For use in fire barriers rated for 2 hours or less.

STANDARD CONSTRUCTION:

Frame:	Roll Formed 22 Ga. Galvanized Steel with Safety Edge. Width and height dimensions available in 1/4" increments.
Blades:	Roll Formed 24 Ga. Galvanized Steel, Curtain Type.
Springs:	Stainless Steel.
Transition:	20 Ga. Galvanized Steel.
Finish:	Mill Galvanized Standard.

OPTIONS:
Type-A, Type-B or Type-C.
Fuse Link 165°F, 212°F, 286°F.
Vertical or Horizontal application.
Sleeve options are 20 Ga., 18 Ga., or 16 Ga. and 12", 14" or 16" long.
Low pressure, medium/high pressure or high pressure.
Microswitch.

TYPICAL VERTICAL DAMPER

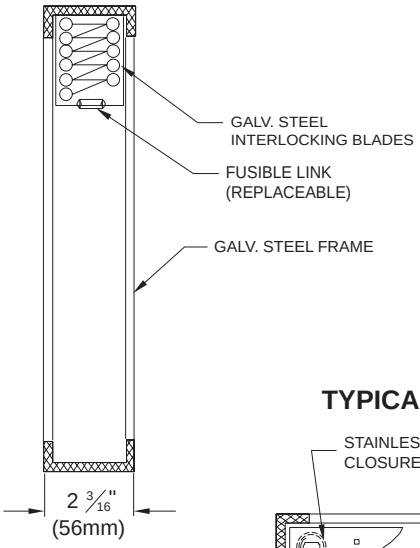

TYPE-A SHOWN

TYPICAL HORIZONTAL DAMPER

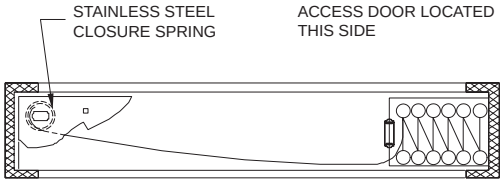

DUCT SIZE LIMITATIONS:

	MIN.	MAX. SINGLE SECTION
Vertical A	4.25"W x 4.00"H	48.25"W x 48.25"H
Vertical B	4.25"W x 2.00"H	48.25"W x 43.25"H
Vertical C	5.25" DIA.	47.25"W x 42.25"H
Horizontal A	4.25"W x 4.00"H	48.25"W x 48.25"H
Horizontal B	4.25"W x 2.25"H	48.25"W x 43.25"H
Horizontal C	5.25" DIA.	47.25"W x 42.25"H

MODEL: MFDUS ULTRA SLIMFRAME

1.5-HOUR RATING

UL CLASSIFIED
(SEE COMPLETE
MARKING ON PRODUCT)

1.5-HOUR RATING:
For use in fire barriers rated for 2 hours or less.

STANDARD CONSTRUCTION:

Frame: Roll Formed 22 Ga. Galvanized Steel with Safety Edge. Width and height dimensions available in 1/4" increments.
Blades: Roll Formed 24 Ga. Galvanized Steel, Curtain Type.
Transition: 20 Ga. Galvanized Steel.
Finish: Mill Galvanized Standard.

OPTIONS:

Type-A, Type-B and Type-C

Fusible link 165°F, 212°F, 286°F.
Vertical application only, not approved for horizontal application.
Sleeve options are 20 Ga., 18 Ga., or 16 Ga. and 12", 14" or 16" long.
Low pressure, medium/high pressure or high pressure.
Microswitch.

TYPICAL VERTICAL DAMPER

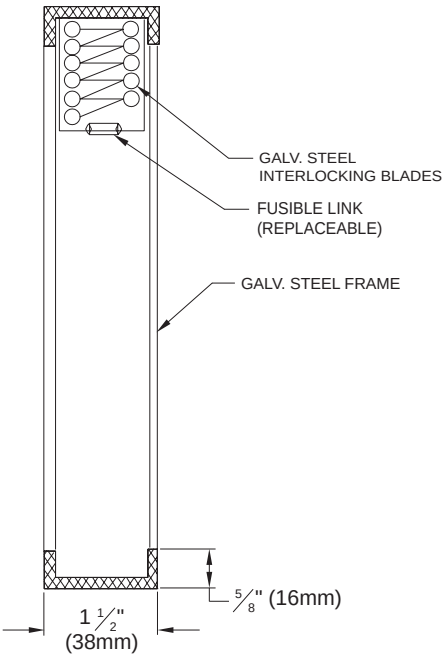

TYPE-A SHOWN

DUCT SIZE LIMITATIONS:

	MIN.	MAX. SINGLE SECTION
Vertical A	4.25"W x 4.00"H	48.25"W x 48.25"H
Vertical B	4.25"W x 2.00"H	48.25"W x 43.25"H
Vertical C	5.25" DIA.	47.25"W x 42.25"H

MODEL: MFD3

3-HOUR RATING

UL CLASSIFIED
(SEE COMPLETE
MARKING ON PRODUCT)

3-HOUR RATING:
For use in fire barriers rated for 4 hours or less.

Standard Construction:

Frame: Roll Formed 22 Ga. Galvanized Steel with Safety Edge. Width and height dimensions available in 1/4" increments.
Blades: Roll Formed 24 Ga. Galvanized Steel, Curtain Type.
Springs: Stainless Steel.
Transition: 20 Ga. Galvanized Steel.
Finish: Mill Galvanized Standard.

Options:

Type-A, Type-B or Type-C
Fusible link 165°F, 212°F, 286°F.
Vertical or Horizontal applications.
Sleeve options are 20 Ga., 18 Ga., or 16 Ga., and 12", 14" or 16" long.
Low pressure, medium/high pressure or high pressure.
Microswitch.

TYPICAL VERTICAL DAMPER

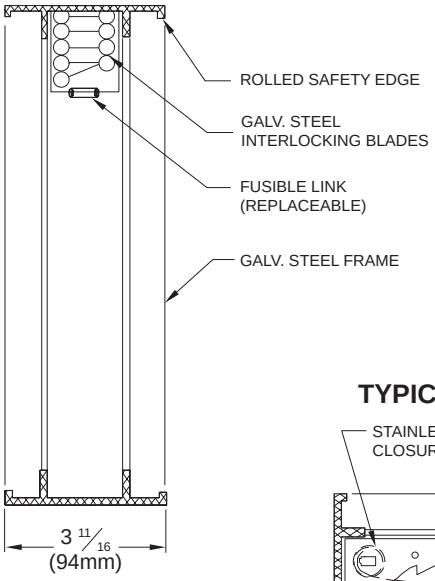

TYPE-A SHOWN

TYPICAL HORIZONTAL DAMPER

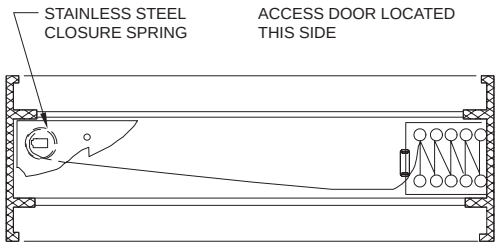

DUCT SIZE LIMITATIONS:

	MIN.	MAX. SINGLE SECTION	MAX. MULTI SECTION
Vertical A	4.25"W x 3.75"H	60.25"W x 60.25"H	
Vertical B	4.25"W x 2.00"H	60.25"W x 55.25"H	
Vertical C	5.25" DIA.	59.25"W x 54.25"H	
Horizontal A	4.25"W x 4.00"H	40.25"W x 40.25"H	80.00"W x 40.00"H
Horizontal B	4.25"W x 2.25"H	40.25"W x 36.25"H	80.00"W x 36.00"H
Horizontal C	5.25" DIA.	39.25"W x 35.25"H	

MODEL: MFDS3 SLIMFRAME

3-HOUR RATING

UL CLASSIFIED
(SEE COMPLETE
MARKING ON PRODUCT)

3-HOUR RATING:
For use in fire barriers rated for 4 hours or less.

STANDARD CONSTRUCTION:

Frame:	Roll Formed 22 Ga. Galvanized Steel with Saftey Edge. Width and height dimensions available in 1/4" increments.
Blades:	Roll Formed 24 Ga. Galvanized Steel, Curtain Type.
Springs:	Stainless Steel.
Transition:	20 Ga. Galvanized Steel.
Finish:	Mill Galvanized Standard.

OPTIONS:
Type-A, Type-B or Type-C.
Fuse Link 165°F, 212°F, 286°F.
Vertical or Horizontal application.
Sleeve options are 20 Ga., 18 Ga., or 16 Ga. and 12", 14" or 16" long.
Low pressure, medium/high pressure or high pressure.
Microswitch.

TYPICAL VERTICAL DAMPER

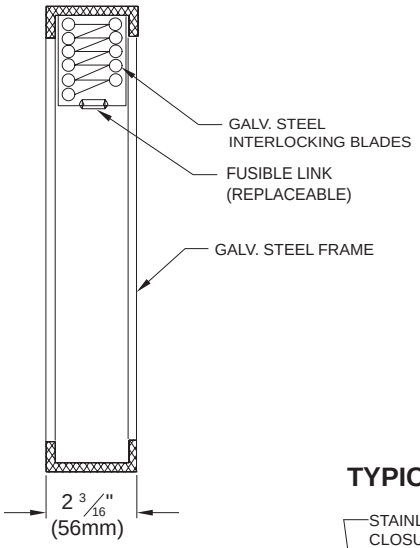

TYPE-A SHOWN

TYPICAL HORIZONTAL DAMPER

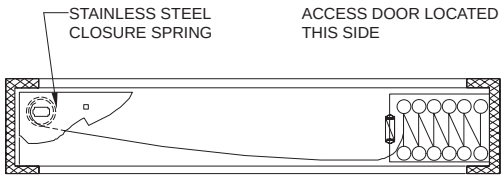

DUCT SIZE LIMITATIONS:

	MIN.	MAX. SINGLE SECTION
Vertical A	4.25"W x 4.00"H	48.25"W x 48.25"H
Vertical B	4.25"W x 2.00"H	48.25"W x 43.25"H
Vertical C	5.25" DIA.	47.25"W x 42.25"H
Horizontal A	4.25"W x 4.00"H	48.25"W x 48.25"H
Horizontal B	4.25"W x 2.25"H	48.25"W x 43.25"H
Horizontal C	5.25" DIA.	47.25"W x 42.25"H

MODEL: MFDUS3 ULTRA SLIMFRAME

3-HOUR RATING

UL CLASSIFIED
(SEE COMPLETE
MARKING ON PRODUCT)

3-HOUR RATING:
For use in fire barriers rated for 4 hours or less.

STANDARD CONSTRUCTION:

Frame: Roll Formed 22 Ga. Galvanized Steel with Safety Edge. Width and height dimensions Available in 1/4" increments.
Blades: Roll Formed 24 Ga. Galvanized Steel, Curtain Type.
Transition: 20 Ga. Galvanized Steel.
Finish: Mill Galvanized Standard.

OPTIONS:

Type-A, Type-B and Type-C

Fusible link 165°F, 212°F, 286°F.
Vertical application only, not approved for horizontal application.
Sleeve options are 20 Ga., 18 Ga., or 16 Ga. and 12", 14" or 16" long.
Low pressure, medium/high pressure or high pressure.
Microswitch.

TYPICAL VERTICAL DAMPER

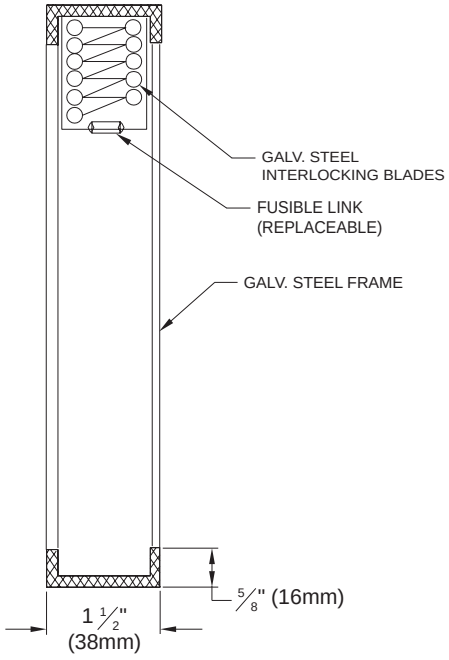

TYPE-A SHOWN

DUCT SIZE LIMITATIONS:

	MIN.	MAX. SINGLE SECTION
Vertical A	4.25"W x 4.00"H	48.25"W x 48.25"H
Vertical B	4.25"W x 2.00"H	48.25"W x 43.25"H
Vertical C	5.25" DIA.	47.25"W x 42.25"H

MODEL: MDFD

1.5-HOUR RATING

UL CLASSIFIED
(SEE COMPLETE
MARKING ON PRODUCT)

1.5-HOUR RATING:
For use in fire barriers rated for 2 hours or less.

Standard Construction:

Frame:	Roll Formed 22 Ga. Galvanized Steel with Safety Edge. Width and height dimensions available in 1/4" increments.
Blades:	Roll Formed 24 Ga. Galvanized Steel, Curtain Type.
Springs:	Stainless Steel.
Fusible link:	165°F.
Transition:	20 Ga. Galvanized Steel.
Finish:	Mill Galvanized Standard.

Options:

Type-A, Type-B and Type-C

Vertical or Horizontal application.
Sleeve options are 20 Ga., 18 Ga., or 16 Ga. and 12", 14" or 16" long.
Low pressure, medium/high pressure or high pressure.
Microswitch.

TYPE-A SHOWN

TYPICAL VERTICAL DAMPER

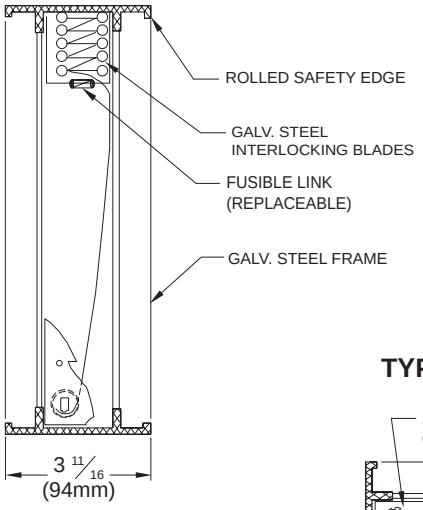

TYPICAL HORIZONTAL DAMPER

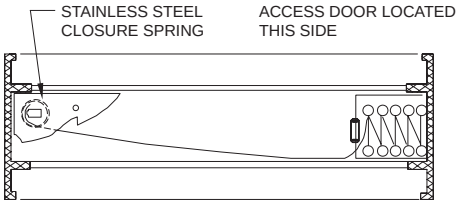

DUCT SIZE LIMITATIONS:

	MIN.	MAX. SINGLE SECTION	MAX. MULTI SECTION
Vertical A	6.50"W x 5.25"H	36.25"W x 36.25"H	N/A
Vertical B	6.50"W x 3.25"H	36.25"W x 33.25"H	N/A
Vertical C	5.50" DIA.	35.25"W x 32.25"H	N/A
Horizontal A	6.50"W x 5.25"H	18.25"W x 18.25"H	36.25"W x 36.25"H
Horizontal B	6.50"W x 3.25"H	18.25"W x 16.25"H	36.25"W x 32.25"H
Horizontal C	5.50" DIA.	17.25"W x 15.25"H	N/A

MODEL: MDFDS SLIMFRAME

1.5-HOUR RATING

UL CLASSIFIED
(SEE COMPLETE
MARKING ON PRODUCT)

1.5-HOUR RATING:
For use in fire barriers rated for 2 hours or less.

STANDARD CONSTRUCTION:

Frame:	Roll Formed 22 Ga. Galvanized Steel with Safety Edge. Width and height dimensions available in 1/4" increments.
Blades:	Roll Formed 24 Ga. Galvanized Steel, Curtain Type.
Springs:	Stainless Steel.
Fusible link:	165°F.
Transition:	20 Ga. Galvanized Steel.
Finish:	Mill Galvanized Standard.

OPTIONS:

Type-A, Type-B and Type-C

Vertical or Horizontal application.
Sleeve options are 20 Ga., 18 Ga., or 16 Ga. and 12", 14" or 16" long.
Low pressure, medium/high pressure or high pressure.
Microswitch.

TYPICAL VERTICAL DAMPER

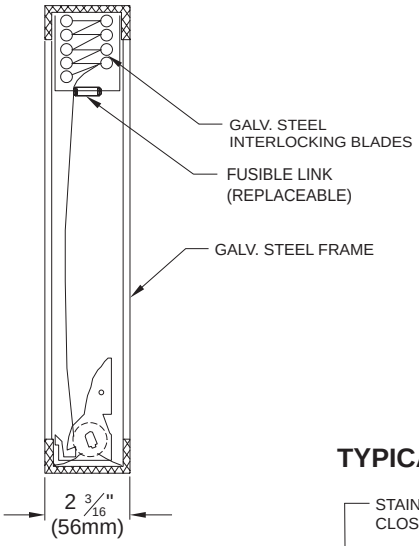

TYPE-A SHOWN

TYPICAL HORIZONTAL DAMPER

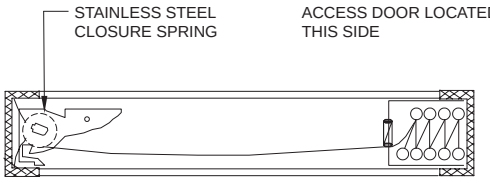

DUCT SIZE LIMITATIONS:

	MIN.	MAX. SINGLE SECTION	MAX. MULTI SECTION
Vertical A	6.50"W x 5.25"H	36.25"W x 36.25"H	N/A
Vertical B	6.50"W x 3.25"H	36.25"W x 33.25"H	N/A
Vertical C	5.50" DIA.	35.25"W x 31.25"H	N/A
Horizontal A	6.50"W x 5.25"H	18.25"W x 18.25"H	36.25"W x 36.25"H
Horizontal B	6.50"W x 3.25"H	18.25"W x 16.25"H	36.25"W x 32.25"H
Horizontal C	5.50" DIA.	17.25"W x 16.25"H	N/A

MODEL: MDFD3

3-HOUR RATING

UL CLASSIFIED
(SEE COMPLETE
MARKING ON PRODUCT)

3-HOUR RATING:
For use in fire barriers rated for 4 hours or less.

Standard Construction:

Frame:	Roll Formed 22 Ga.Galvanized Steel with Safety Edge. Width and height dimensions available in 1/4" increments.
Blades:	Roll Formed 24 Ga. Galvanized Steel, Curtain Type.
Springs:	Stainless Steel.
Fusible link:	165°F.
Transition:	20 Ga. Galvanized Steel.
Finish:	Mill Galvanized Standard.

Options:

Type-A, Type-B and Type-C

Vertical or Horizontal application.
Sleeve options are 20 Ga., 18 Ga., or 16 Ga. and 12", 14" or 16" long.
Low pressure, medium/high pressure or high pressure.
Microswitch.

TYPICAL VERTICAL DAMPER

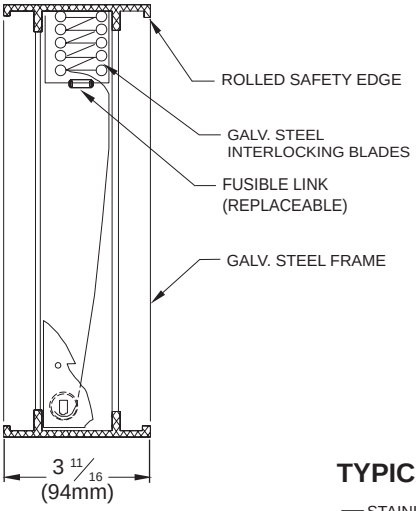

TYPE-A SHOWN

TYPICAL HORIZONTAL DAMPER

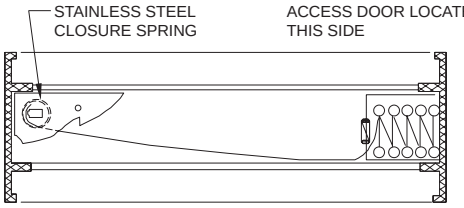

DUCT SIZE LIMITATIONS:

	MIN.	MAX. SINGLE SECTION	MAX. MULTI SECTION
Vertical A	6.50"W x 5.25"H	36.25"W x 36.25"H	N/A
Vertical B	6.50"W x 3.25"H	36.25"W x 33.25"H	N/A
Vertical C	5.50" DIA.	35.25"W x 32.25"H	N/A
Horizontal A	6.50"W x 5.25"H	18.25"W x 18.25"H	36.25"W x 36.25"H
Horizontal B	6.50"W x 3.25"H	18.25"W x 16.25"H	36.25"W x 32.25"H
Horizontal C	5.50" DIA.	17.25"W x 15.25"H	N/A

MODEL: MDFDS3 SLIMFRAME

3-HOUR RATING

UL CLASSIFIED
(SEE COMPLETE
MARKING ON PRODUCT)

3-HOUR RATING:
For use in fire barriers rated for 4 hours or less.

STANDARD CONSTRUCTION:

Frame:	Roll Formed 22 Ga. Galvanized Steel with Safety Edge. Width and height dimensions available in 1/4" increments.
Blades:	Roll Formed 24 Ga. Galvanized Steel, Curtain Type.
Springs:	Stainless Steel.
Fusible link:	165°F.
Transition:	20 Ga. Galvanized Steel.
Finish:	Mill Galvanized Standard.

OPTIONS:

Type-A, Type-B and Type-C

Vertical or Horizontal application.
Sleeve options are 20 Ga., 18 Ga., or 16 Ga. and 12", 14" or 16" long.
Low pressure, medium/high pressure or high pressure.
Microswitch.

TYPICAL VERTICAL DAMPER

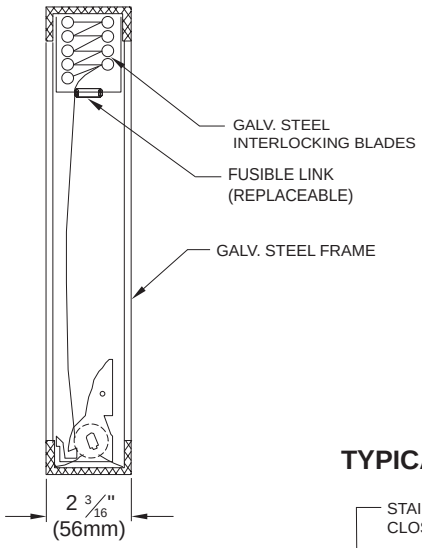

TYPE-A SHOWN

TYPICAL HORIZONTAL DAMPER

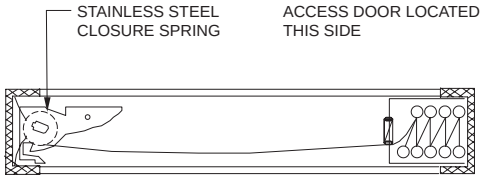

DUCT SIZE LIMITATIONS:

	MIN.	MAX. SINGLE SECTION	MAX. MULTI SECTION
Vertical A	6.50"W x 5.25"H	36.25"W x 36.25"H	N/A
Vertical B	6.50"W x 3.25"H	36.25"W x 33.25"H	N/A
Vertical C	5.50" DIA.	35.25"W x 31.25"H	N/A
Horizontal A	6.50"W x 5.25"H	18.25"W x 18.25"H	36.25"W x 36.25"H
Horizontal B	6.50"W x 3.25"H	18.25"W x 16.25"H	36.25"W x 32.25"H
Horizontal C	5.50" DIA.	17.25"W x 16.25"H	N/A

MODEL: MRCD BUTTERFLY

UL 555C LISTED FOR 3-4 HOURS

UL CLASSIFIED
(SEE COMPLETE
MARKING ON PRODUCT)

MODEL MRCD: UL 555C Listed for 3-4 hours

Round, butterfly-type.

STANDARD CONSTRUCTION:

Frame:	22 Ga. galvanized steel.
Blades:	22 Ga. galvanized steel.
Thermal Blanket:	Non-asbestos, ceramic blanket on sizes 80 sq. inches and up.
Spring:	Corrosion resistant steel spring.
Finish:	Mill Galvanized.

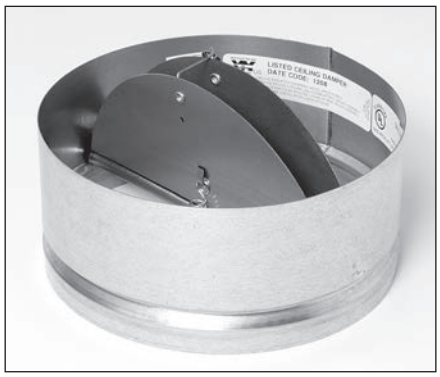

OPTIONS:

Frame Height:	2.5" or 3.5".
Adjustable Volume Control	
Fusible Link:	Replaceable 165°F or 212°F.
Outlet Transition:	Round to Square.
Thermal Blanket:	TB5000, 24" x 24" x 1/8" non-asbestos, ceramic blanket.

SIZE LIMITATIONS:
Minimum 3.875" dia., Maximum 18" dia.

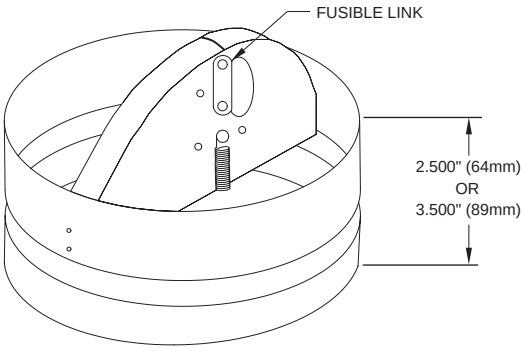

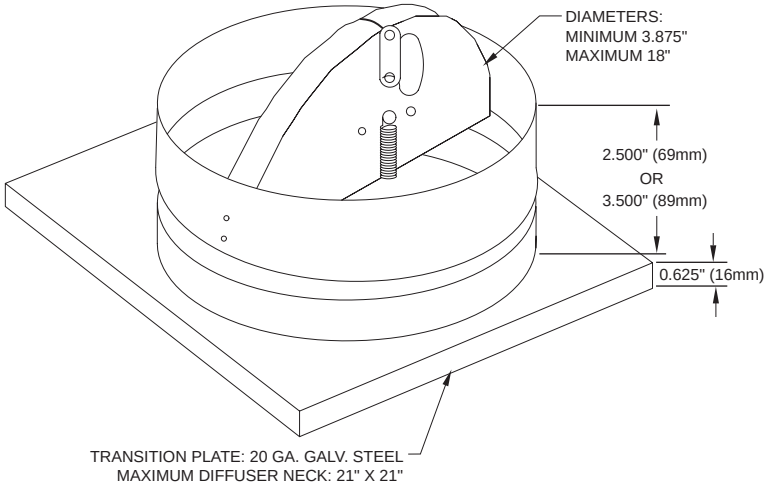

MODEL MCRD WITH ROUND TO SQUARE TRANSITION

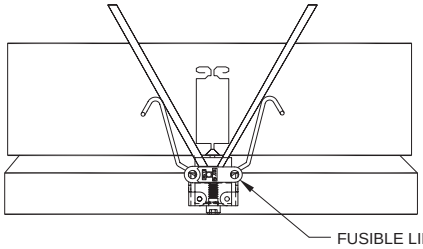

MODEL MCRD WITH ADJUSTABLE VOLUME CONTROL

MODEL: MSCD BUTTERFLY

UL 555C LISTED FOR 3-4 HOURS

UL CLASSIFIED
(SEE COMPLETE
MARKING ON PRODUCT)

MODEL MSCD: UL 555C Listed for 3-4 hours.

Square or rectangular butterfly-type.

STANDARD CONSTRUCTION:

Frame:	Roll formed, 22 Ga. galvanized steel.
Blades:	22 Ga. galvanized steel.
Thermal Blanket:	Non-asbestos, ceramic blanket on sizes 80 sq. inches and up.
Spring:	Corrosion resistant steel spring.
Finish:	Mill galvanized.

OPTIONS:

Adjustable Volume Control

Fusible Link:	Replaceable 165°F or 212°F.
Outlet Transition:	Square to Round.
Thermal Blanket:	TB5000, 24" x 24" x 1/8" non-asbestos, ceramic blanket.

SIZE LIMITATIONS:

Sizes:	Minimum: 3.75" W or 3.75" H. Minimum area: 24 sq. inch (nominal). Maximum 22" W x 22" H.

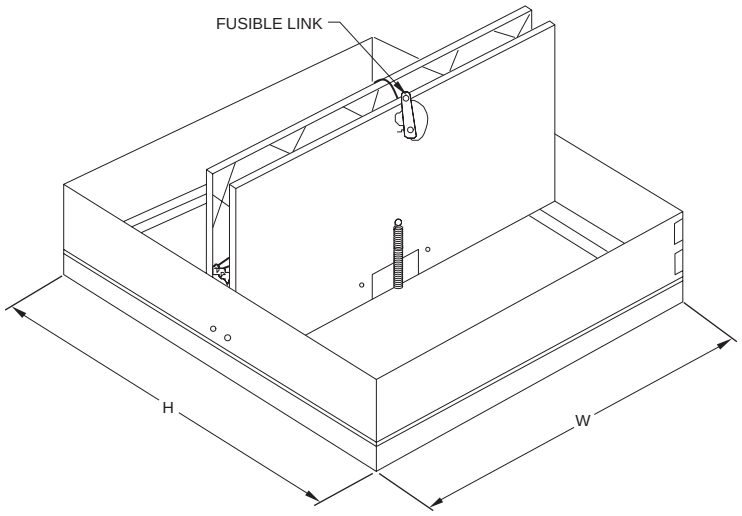

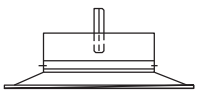

FOR INSTALLATION DIRECTLY OVER DIFFUSER NECK ORDER "ACTUAL SIZE" DAMPER

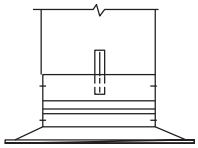

FOR INSTALLATION INSIDE DUCT, OR DIFFUSER NECK CHECK BOX ON ORDER FORM (I.E. SUBTRACT 1/4" FROM THE ACTUAL SIZE DAMPER.)

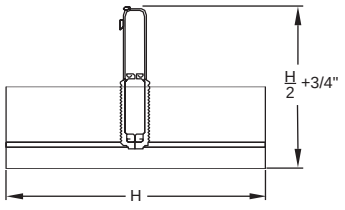

MODEL MSCD

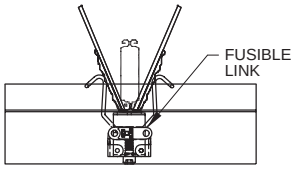

MODEL MSCD
WITH ADJUSTABLE VOLUME
CONTROL.

MODEL: MSCDSB SINGLE BLADE

UL 555C LISTED FOR 3-4 HOURS

UL CLASSIFIED
(SEE COMPLETE
MARKING ON PRODUCT)

MODEL MSCD: UL 555C Listed for 3-4 hours.

Square or rectangular single blade type.

STANDARD CONSTRUCTION:

Frame:	Roll formed, 22 Ga. galvanized steel.
Blades:	22 Ga. galvanized steel.
Thermal Blanket:	Non-asbestos, ceramic blanket on sizes 80 sq. inches and up.
Spring:	Corrosion resistant steel spring.
Finish:	Mill galvanized.

OPTIONS:

Fusible Link:	Replaceable 165°F or 212°F.
Thermal Blanket:	TB5000, 24" x 24" x 1/8" non-asbestos, ceramic blanket.

SIZE LIMITATIONS:

Sizes:	Minimum: 3.75" W or 3.75" H. Minimum area: 16 sq. inch (nominal). Maximum 22" W x 6" H.

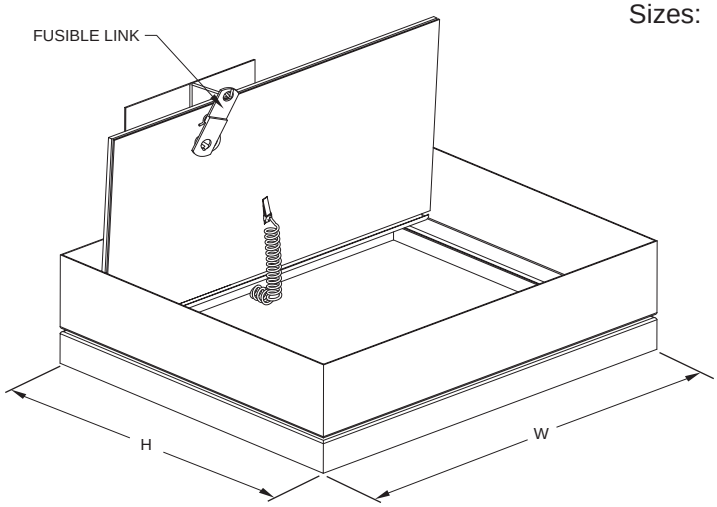

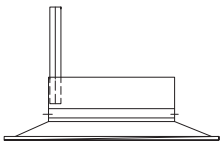

FOR INSTALLATION DIRECTLY OVER DIFFUSER NECK ORDER "ACTUAL SIZE" DAMPER.

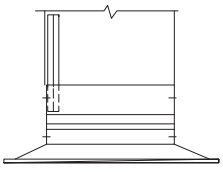

FOR INSTALLATION INSIDE DUCT, OR DIFFUSER NECK CHECK BOX ON ORDER FORM (I.E. SUBTRACT 1/4" FROM THE ACTUAL SIZE DAMPER.)

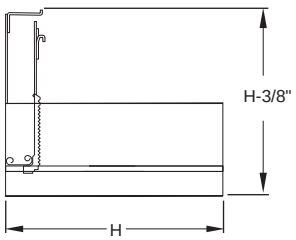

MODEL MSCDSB

MODEL: MCCD

UL 555C LISTED FOR 3-4 HOURS

UL CLASSIFIED
(SEE COMPLETE
MARKING ON PRODUCT)

MODEL MCCD: UL 555C Listed for 3-4 hours.

Square or rectangular damper with quilted ceramic thermal blanket, (non-asbestos).

STANDARD CONSTRUCTION:

Frame:	Roll formed, 22 Ga. galvanized steel.
Blades:	Roll formed, 24 Ga. galvanized steel.
Thermal Blanket:	Non-asbestos, ceramic blanket.
Springs:	Stainless steel.
Finish:	Mill galvanized.

OPTIONS:

Type-B:	B channels installed (see below).
Fusible Link:	Replaceable 165°F, 212°F.
Thermal Blanket:	TB5000 24" x 24" x 1/8", non-asbestos, ceramic blanket.

SIZE LIMITATIONS:
Minimum: 4.00" W or 4.25" H.
Minimum area: 24 sq. inch (nominal).
Maximum 23.75" W x 23.75" H.

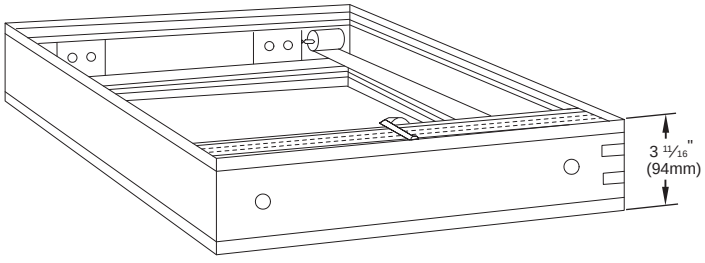

MODELS

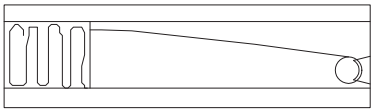

TYPE-A

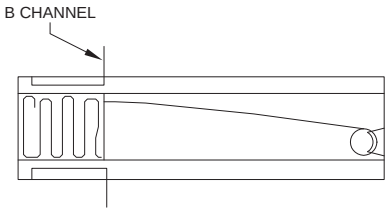

TYPE-B

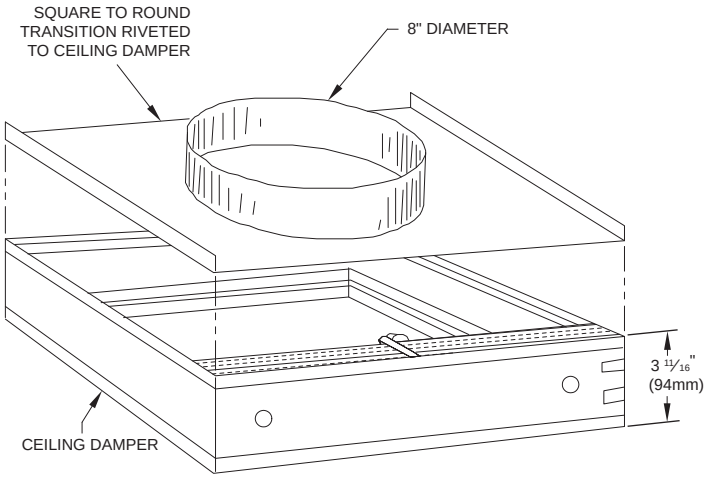

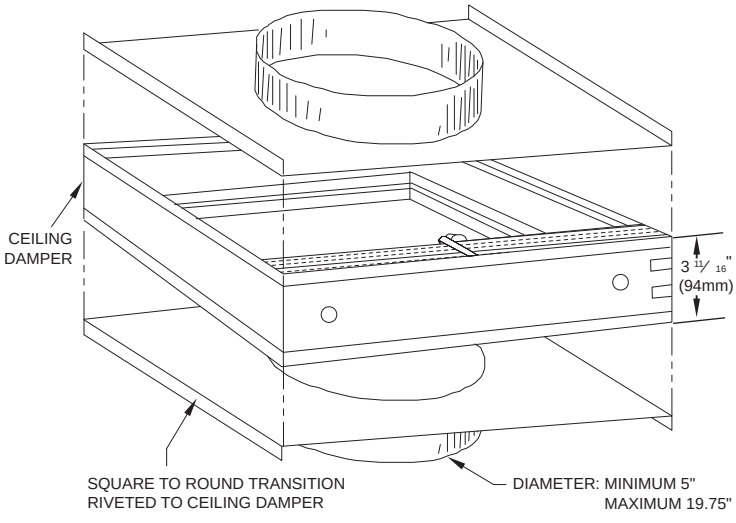

MODEL: MSCDHC, MRCDHC & MSCDSBHC

UL 555C LISTED FOR 3-4 HOURS

UL CLASSIFIED
(SEE COMPLETE
MARKING ON PRODUCT)

MODEL: MSCDHC, MRCDHC & MSCDSBHC

Ceiling Radiation Dampers in boot assemblies for use in UL fire resistance floor-ceiling & roof-ceiling designs as listed in the UL fire resistance directory. Metal-Fab ceiling radiation damper assemblies are classified and compliant to ANSI/UL263 testing requirements.

Metal-Fab's MRCDHC, MSCDHC and MSCDSBHC Ceiling Radiation Dampers may also be substituted into any UL design which incorporates a hinged blade damper as outlined in the UL fire resistance directory. Models MSCDHC, MRCDHC and MSCDSBHC are 3-hour rated dampers, for use in registers or drop duct applications.

UL Designs L501, L502 and L563.

Metal-Fab ceiling radiation dampers are 1-hour fire rated for the following UL approved ceiling/floor and ceiling/roof assemblies - L-501, L-502, and L-563 designs, similar to designs; L-521, L-574, L-585, P533, P544, P545, and P547.**

**Other designs mentioned have not been evaluated and are not considered UL classified for use with the associated Metal-Fab products.

UL DESIGN L-501 & L502 LISTING

CEILING RADIATION DAMPER

UL Listed Link:	165º F or 212ºF
Frame & Blades:	22 Ga. Galvanized Steel
Thermal Blanket:	Ceramic Type
Spring:	Corrosion-Resistant Steel
Rating:	1 Hour
Maximum Size:	16"x12" or 15" Dia. 16"x6" for MSCDSBHC

BOOT/REGISTER BOX (Provided by others)

30 Ga. Galvanized Steel Minimum (Sizes up to 12"x12").
Standard Drywall Flange (Optional Extended Length).
Insulation Pre-installed or Supplied by Contractor/Installer.

UL DESIGN L-563 LISTING

CEILING RADIATION DAMPER

UL Listed Link:	165º F or 212ºF
Frame & Blades:	22 Ga. Galvanized Steel
Thermal Blanket:	Ceramic Type
Spring:	Corrosion-Resistant Steel
Rating:	1 Hour
Maximum Size:	16"x16" or 16" Dia. 16"x8" for MSCDSBHC

BOOT/REGISTER BOX (Provided by others)

30 Ga. Galvanized Steel Minimum (Sizes up to 12"x12").
Standard Drywall Flange (Optional Extended Length).
Insulation Pre-installed or Supplied by Contractor/Installer.
Exterior insulated with foil face plenum box, 1-1/2" (R 6.0) minimum thickness fiberglass.

ALTERNATIVE PLENUM BOX CONSTRUCTION

FIBERGLASS DUCTBOARD PLENUM BOX ASSEMBLY

Install Metal-Fab Ceiling Radiation Damper/Plenum Box Assemblies in accordance with instruction sheet L2831 & UL 181A.

Fabricate the fiberglass ductboard plenum box using the joint methods and materials as shown in installations instructions (L2866).

Use only UL 181 Listed fiberglass ductboard with a density of 4lbs/cubic ft. minimum and thickness of 1" (25.4mm) or 6lbs/cubic ft. and minimum thickness of 1-3/8" (35mm).

Joint preparation shall be in accordance with the joint construction and ductboard foil backing overlap shown in L2866 (Fiberglass Ductboard Plenum Box Installation Instructions).

Use only UL 181 Listed aluminum tape 2" wide minimum sealing all corners, joints and support angle penetrations.

Secure plenum box to the damper sleeve and support angles using UL 181 Listed tape.

MODEL: MFRA FRAMED RETAINING ANGLES

UL CLASSIFIED
(SEE COMPLETE
MARKING ON PRODUCT)

STANDARD CONSTRUCTION:
16 Ga. 1-1/2" x 1-1/2" formed galvanized steel with staked corners.

Sizes: Minimum 6-1/4" x 6-1/4".
Maximum 48" x 48".

NOTE: When the damper or the damper assemblies exceed either 48" in width or height, the retaining angles shall not be less than 1-1/2" x 1-1/2" and shall be attached to the sleeve using 1/4-20 x 3/4" roundhead stove bolts at 8" on center. 1" long welds or #14 x 3/4" sheet metal screws at the same spacing.

APPLICATION:
The model MFRA retaining angles can be installed on Metal-Fab curtain fire dampers. MFRA retaining angles are shipped in sets of two.

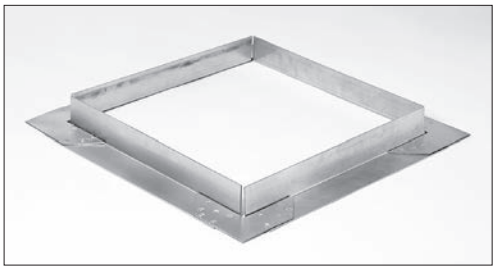

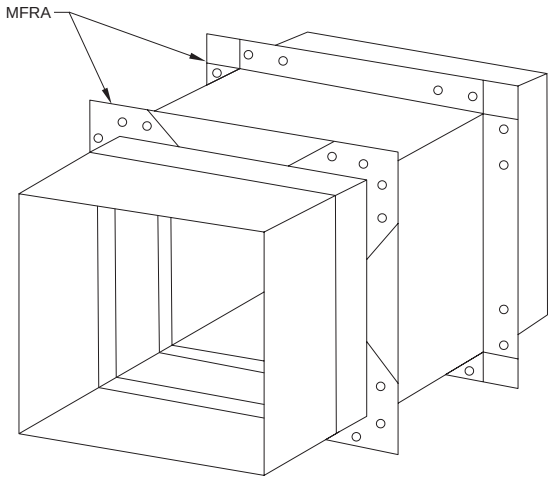

MODEL MFRA

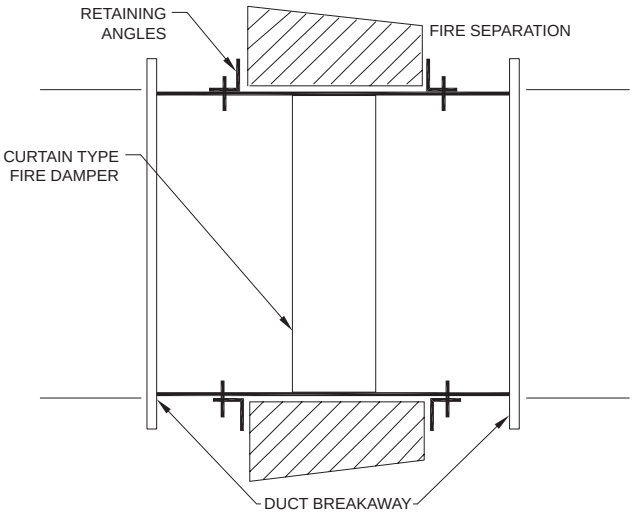

Vertical Installation Shown Horizontal is Similar.

CEILING RADIATION DAMPER ADJUSTABLE VOLUME CONTROL

UL CLASSIFIED
(SEE COMPLETE
MARKING ON PRODUCT)

The adjustable volume control is available on the MRCD and MSCD models. The damper has a mechanism that allows the blades of the ceiling damper to be adjusted into or out of the damper frame. The blade adjustment has a direct effect on the airflow volume through the damper and the register or grill.

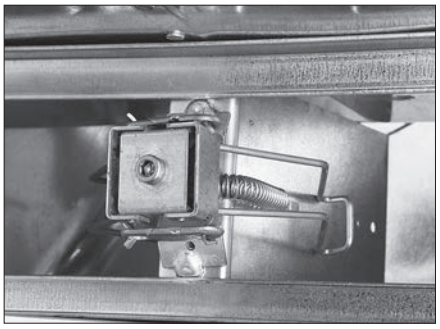

ADJUSTABLE VOLUME CONTROL ON MSCD

MODEL: TB5000 THERMAL BLANKET

UL CLASSIFIED
(SEE COMPLETE
MARKING ON PRODUCT)

MODEL TB5000: Ceramic Fiber Thermal Blanket.
Dimensions: 24" x 24" x 1/8".

FEATURES:

- Listed and labeled by UL for openings up to 576 sq. in., rated 4 hrs. or less.
- Lightweight, non-asbestos fabric can be easily installed in the field.
- Allows for ceiling openings larger than duct size (e.g. lay-in diffusers).
- Tested up to 2000°F at 4 hours.

NOTE: TB5000 Thermal Blanket is approved for use with all Metal-Fab ceiling dampers (i.e. Model MCRD with transition).

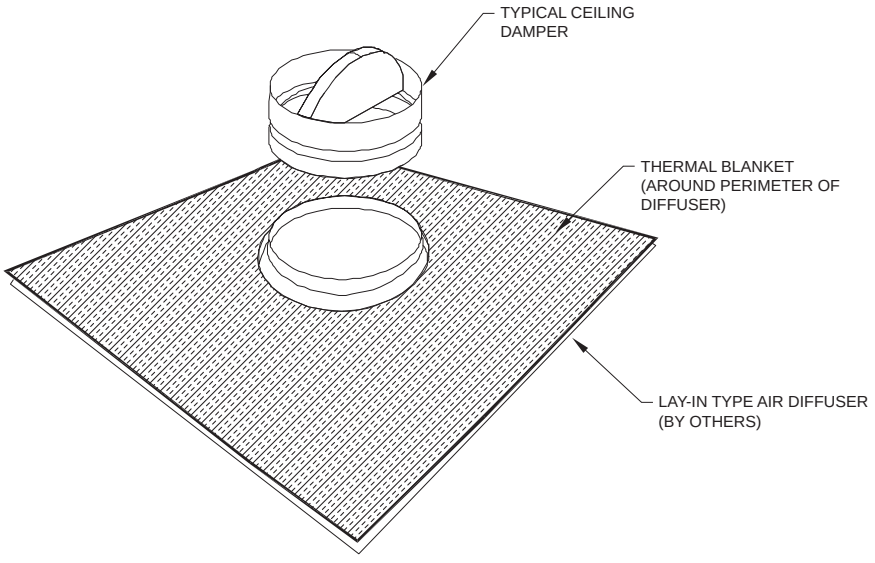

A FULL LINE OF QUALITY PRODUCTS

TYPE-B GAS VENT

Easiest Installation on the market...featuring SureLock™ B-Vent Locking System.

AIR-COOLED TEMP/GUARD®

For use with masonry fireplaces which burn wood, oil, coal or gas.

DIRECT VENT

Premium quality, for use with category I gas-fired appliances.

CORR/GUARD®

Designed for corrosive appliances and exhaust systems.

FLEXIBLE CHIMNEY LINERS

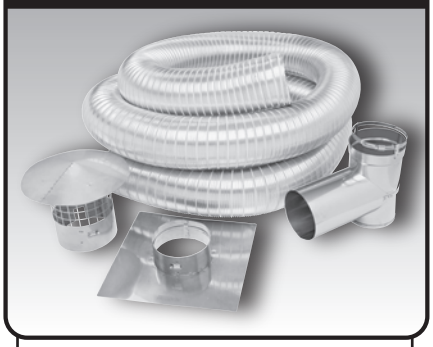

Stainless steel and aluminum liner kits, connectors, and accessories.

BIOMASS

Designed for use with pellet, corn or wheat-fired appliances.

PREMIUM BIOMASS

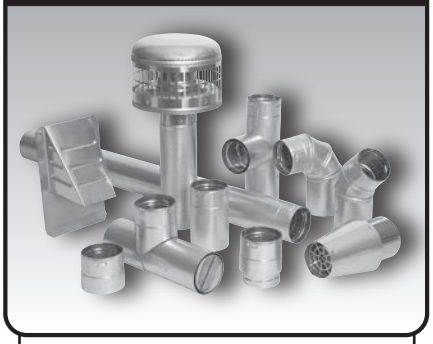

Designed for use with pellet, corn or wheat-fired appliances.

SOLID FUEL

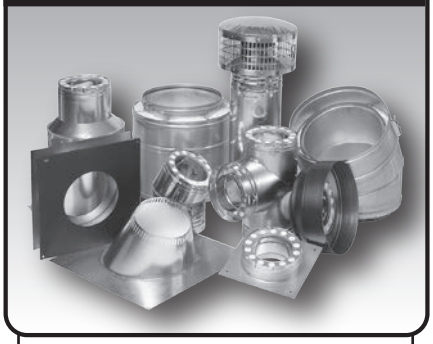

Complete line of Solid Fuel Chimney and Black Stovepipe.

GRILLES & REGISTERS

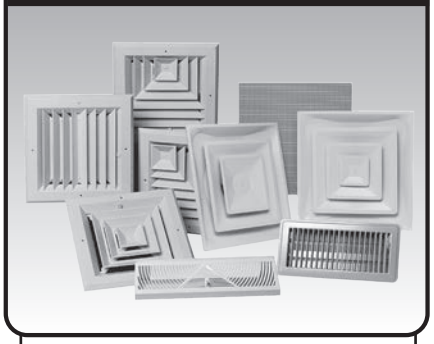

A quality, complete line including 2x2 diffusers and extruded aluminum components.

800-835-2830

METAL-FAB INC.

P.O.BOX 1138 • WICHITA, KANSAS 67201 • (316) 943-2351 • FAX (316) 943-2717 • e-mail: info@metal-fabinc.com • www.metal-fabinc.com

Litho in U.S.A. ©2023 Metal-Fab, Inc.

Form No. L2539-5/23
10439